Silicon - Z-Diode

BZX55C6V2

6.2V

500mW Z-Diode

DATASHEET

OEM – Fairchild

Source: Fairchild Databook 1978

Datasheet Rev. 1.3 – 03/19 – data without warranty / liability

BZX55C3V3 – BZX55C33

500 mW SILICON ZENER DIODES

ABSOLUTE MAXIMUM RATINGS (Note 1)

Temperatures

Storage Temperature Range	−65°C to +200°C
Maximum Junction Operating Temperature	+200°C
Lead Temperature	+260°C

Power Dissipation (Note 2)

Maximum Total Power Dissipation at 25°C Ambient	500 mW
Linear Power Derating Factor (from 25°C)	2.85 mW/°C
Maximum Surge Power (Note 4)	30 W

DO-35 OUTLINE

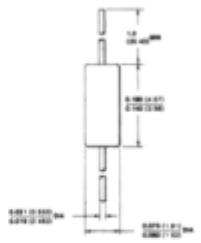

NOTES:
Copper clad steel leads, tin plated
Gold plated leads available
Hermetically sealed glass package
Package weight is 0.14 gram

ELECTRICAL CHARACTERISTICS (25°C Ambient)

SYMBOL	V_Z		Z_Z	Z_{ZK}	I_R	V_{RT}	I_{ZM}	TC
CHARACTERISTIC	Zener Voltage (Note 3) @I_Z=5.0 mA		Maximum Zener Impedance @I_Z=5.0 mA	Maximum Zener Knee Impedance @I_{ZK}=1.0 mA	Maximum Reverse Current @V_{RT} 150°C	Test Voltage	Maximum Zener Current	Typical Temperature Coefficient of V_Z
	MIN	MAX						
UNIT	V	V	Ω	Ω	μA	V	μA	%/°C
BZX55C3V3	3.1	3.5	85	600	40	1.0	115	−0.060
BZX55C3V6	3.4	3.8	85	600	40	1.0	108	−0.055
BZX55C3V9	3.7	4.1	80	600	40	1.0	100	−0.050
BZX55C4V3	4.0	4.6	70	600	40	1.5	90	−0.040
BZX55C4V7	4.4	5.0	60	600	30	1.5	85	−0.020
BZX55C5V1	4.8	5.4	35	550	2.0	1.0	79	+0.010
BZX55C5V6	5.2	6.0	25	450	2.0	1.0	74	+0.025
BZX55C6V2	5.8	6.6	10	200	2.0	2.0	69	+0.032
BZX55C6V8	6.4	7.2	8.0	150	2.0	3.0	64	+0.040
BZX55C7V5	7.0	7.9	7.0	50	2.0	5.0	59	+0.045
BZX55C8V2	7.7	8.7	7.0	50	2.0	6.0	54	+0.048
BZX55C9V1	8.5	9.6	10	50	2.0	7.0	49	+0.050
BZX55C10	9.4	10.6	15	70	2.0	7.5	44	+0.055
BZX55C11	10.4	11.6	20	70	2.0	8.5	40	+0.060
BZX55C12	11.4	12.7	20	90	2.0	9.0	36	+0.065
BZX55C13	12.4	14.1	26	110	2.0	10	32	+0.070
BZX55C15	13.8	15.6	30	110	2.0	11	30	+0.070
BZX55C16	15.3	17.1	40	170	2.0	12	27	+0.075
BZX55C18	16.8	19.1	50	170	2.0	14	24	+0.075
BZX55C20	18.8	21.2	55	220	2.0	15	22	+0.080
BZX55C22	20.8	23.3	55	220	2.0	17	20	+0.080
BZX55C24	22.8	25.6	80	220	2.0	18	18	+0.085
BZX55C27	25.1	28.9	80	220	2.0	20	16	+0.085
BZX55C30	28.0	32.0	80	220	2.0	22	15	+0.085
BZX55C33	31.0	35.0	80	220	2.0	24	13	+0.085

NOTES:
1. These ratings are limiting values above which the serviceability of the diode may be impaired.
2. These are steady state limits. The factory should be consulted on application involving pulsed or low duty-cycle operation.
3. ±20%, ±10%, ±2% and ±1% V_Z tolerance versions are available.
4. Non-recurrent square wave, PW = 100 μs, T_J = 150°C.
5. V_F = 1.0 V (max) @ I_F = 100 mA for all types.
6. For product family characteristic curves, refer to Chapter 4, D13.

CURVE SET NUMBER D13

500 mW ZENER

TYPICAL ELECTRICAL CHARACTERISTICS

AT 25°C AMBIENT TEMPERATURE

TEMPERATURE COEFFICIENT VERSUS ZENER CURRENT

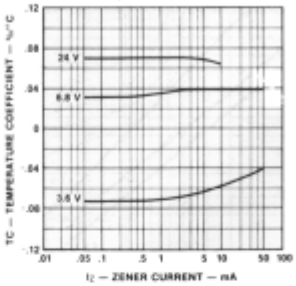

DYNAMIC IMPEDANCE VERSUS ZENER CURRENT

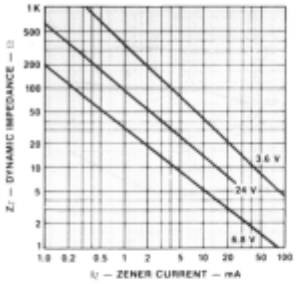

POWER DERATING VERSUS AMBIENT TEMPERATURE

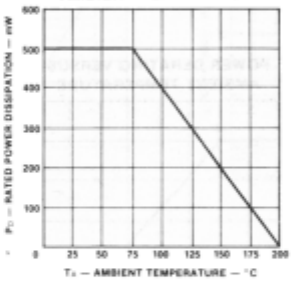

NOISE DENSITY MEASUREMENT CIRCUIT

1N4099 – 1N4121
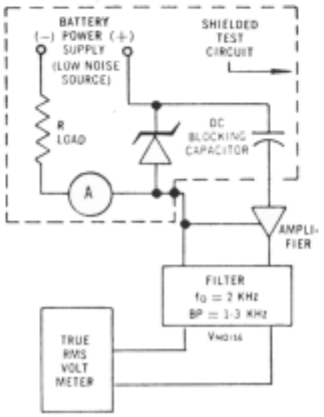
1N4620 – 1N4627